Technical reference

Contents

A. Building a FlexLink system.....195
B. Materials 196
C. Conveyor noise level 198

A. Building a FlexLink system

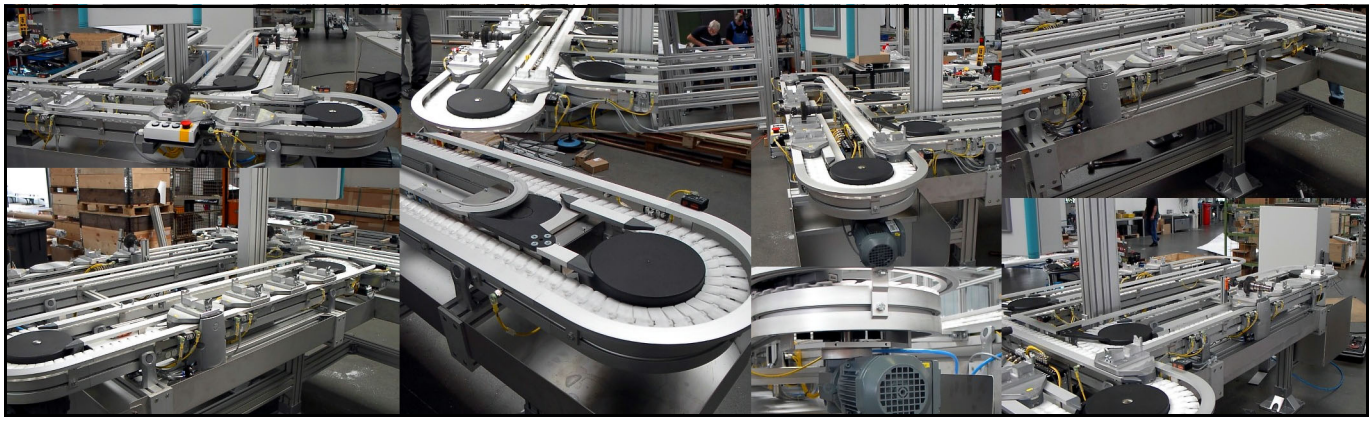

Modules and components

When designing a FlexLink system the general idea is to take advantage of pre-designed function modules as much as possible. Using Online Store it is possible to configure in very short time to design systems ranging from support to complex modules.

In addition, individual components are available to create special functions, modify existing ones, or to serve as spare parts.

Configuration tools

For many products, online configuration tools must be used when ordering. Item numbers (designations) which refer to use of the tools are grey in the catalogue, which means that they cannot be used for ordering.

Configuration principles

FlexLink´s system is designed to be very flexible with regard to the price-performance requirements. The following performance levels have been established:

Basic

- A conveyor solution for light load/speed applications
- High quality products tailored for low load/speed applications
- Light load with chain pull up to 300 N and speed below 40 m/min

Standard

- A conveyor solution for the average application
- Light load with chain pull up to 800 N and speed below 60 m/min

High performance

- Conveyors for high load or high speed applications Light load with chain pull up to 1250 N and speed below 80 m/min
  Low noise
  Low dust generation

High speed

- Conveyors for speeds up to 130 m/min

Conductive

- Conveyors with conductive materials

Tough environment

- Conveyors for applications in dirty environments or with foreign particles or with fluid chemicals
- High wear resistance
- Chemical resistance

Based on these performance levels, the configuration tools point the user to the most suitable combination of features to fulfil the requirements. Configuration recipes are available that guide selection of drive unit version and speed, slide rail material, chain types, bend types, etc. For pallet handling devices, it is possible to specify pallet type, support options, sensors, etc. Price and delivery information is given instantly.

Once configured you can download a CAD STEP-file of the actual configuration. The configuration tool is easy to learn and available around the clock.

My FlexLink

My FlexLink is an extended FlexLink.com and is your portal for simplified engineering and business.
It contains:

- Online Store
- Customer Room
- Intelligent Conveyor Software
- Engineering Tools

To access all above, register and gain immediate access.

Compatible with most common chemicals

FlexLink´s conveyor components can withstand lengthy contact with most chemicals used in normal workshop environments. It is, however, necessary to avoid acids with pH lower than 4, bases with pH above 9, and lengthy exposure to chlorinated hydrocarbons such as trichloroethylene.

The following tables specify the resistance of the materials used in FlexLink´s components to various chemicals. For some chemicals, the reactions depend on concentration and form of the chemical. A higher concentration of an acid will cause more swelling of the material subjected to it. Also, the liquid form of a gas results in more brisk reactions.

Legend

1 indicates very high resistance, whereas 4 indicates an unsuitable combination. “–” means that no data is available.

Acids

Chemical agent	POM	PA	PA-PE	PVDF	HDPE	UHMW-PE	PEBAX
Acetic acid	3	4	4	1	3	1	–
Benzoic acid	3	4	4	1	1	1	–
Boric acid	3	2	2	1	1	1	–
Citric acid	3	2	2	1	2	1	–
Chromic acid	4	4	4	1	1	1	–
Hydrofluoric acid	4	4	4	1	1	1	–
Hydrochloric acid	4	4	4	1	1	1	–
Hydrocyanic acid	4	4	4	1	2	1	–
Nitric acid	4	4	4	1	4	1	–
Oleic acid	3	2	2	1	3	1	–
Oxalic acid	4	2	2	1	1	1	–
Perchlorid acid	4	4	4	1	1	1	–
Phosphoric acid	4	4	4	1	1	1	–
Phtalic acid	4	2	2	1	1	1	–
Sulphuric acid	4	4	4	1	2	1	1
Tannic acid	3	–	–	1	1	1	–
Tartaric acid	3	2	2	1	1	1	–

Basic compounds

Chemical agent	POM	PA	PA-PE	PVDF	HDPE	UHMW-PE	PEBAX
Ammonia (solution)	1	2	2	1	1	1	–
Calcium hydroxide	1	2	2	1	1	1	–
Caustic soda	1	2	2	1	1	1	1
Potassium hydroxide	1	2	2	1	1	1	–

Gases

Chemical agent	POM	PA	PA-PE	PVDF	HDPE	UHMW-PE	PEBAX
Carbon dioxide	3	1	1	1	1	1	–
Carbon monoxide	2	1	1	1	1	1	–
Chlorine (dry)	2	4	4	1	3	3	–
Chlorine (wet)	4	4	4	1	4	4	–
Hydrogen sulphide	3	1	1	1	2	1	–
Sulphur dioxide (dry)	2	3	3	1	2	1	–
Sulphur dioxide (wet)	4	4	4	1	2	1	–

 © FlexLink 2021

Organic compounds and solvents

Chemical agent	POM	PA	PA-PE	PVDF	HDPE	UHMW-PE	PEBAX
Acetone	1	1	1	1	4	1	3
Aniline	2	3	3	1	3	1	–
Benzene	1	2	2	1	4	4	3
Benzine	2	2	2	1	3	3	–
Butyl alcohol	2	2	2	1	2	1	–
Carbon disulphide	1	2	2	1	3	3	–
Carbon tetrachloride	1	1	1	1	3	3	–
Chlorobenzene	1	1	1	1	4	4	–
Chloroform	1	3	3	1	4	4	–
Ethyl acetate	1	2	2	1	2	1	–
Ethyl alcohol	1	2	2	1	1	1	–
Ethylic ether	1	2	2	1	4	3	–
Formalin	2	2	2	1	1	1	–
Heptane	2	1	1	1	2	2	–
Methyl alcohol	1	2	2	1	1	1	–
Methyl ethyl ketone	1	1	1	1	4	2	4
Nitrobenzene	2	2	2	1	3	2	–
Phenol	3	4	4	1	2	1	–
Toluene	1	2	2	1	4	4	–
White spirit	–	2	2	2	4	4	–

Salts

Chemical agent	POM	PA	PA-PE	PVDF	HDPE	UHMW-PE	PEBAX
Acid salts	2	3	3	1	1	1	–
Basic salts	1	2	2	1	1	1	–
Neutral salts	1	2	2	1	1	1	–
Potassium bicarbonate	2	2	2	1	2	1	–
Potassium permanganate	2	4	4	1	2	1	–
Sodium cyanide	2	2	2	1	2	1	–
Sodium hypochlorite	3	4	4	1	2	1	–

Chemical test

If you are doubtful about whether our materials will withstand your special environment, you should perform a chemical test. The following procedure, which tests the absorption of the material by measuring the swelling, is suitable for plastic materials. It should be performed at two temperatures, 20 °C and 60 °C. The 60 °C test represents long term exposure at room temperature.

1 Put a sample of the material into the chemical solution.

2 Measure the change in weight and length after 1, 2, 4, and 7 days in the solution. If the relative change of weight, length, or other geometric change exceeds 1 %, the test is considered negative, i.e. the chemical is not compatible with the material.

Static electricity

Low conductivity

The standard plastic materials used for conveyors all have low electrical conductivity. This means that static electricity can build up on the conveyor. If the chain runs on plastic slide rails, no inherent discharge path exists for the static electricity.

When a conveyor is running under normal operating conditions but without products, the following static build-up can be measured:

At the drive unit..... 2000–2500 V
At the idler end unit..... 400–500 V
At a wheel bend..... 400–500 V
At a straight section ..... 300–400 V

Depending on the shape and material, a product running on the conveyor can also build up static electricity. The worst case is with accumulated products. Discharge is normally taking place when the products are transferred to or from the conveyor.

In static sensitive applications, a number of measures can be taken to reduce the risk of excessive static charges.

1 Ensure that the relative humidity is minimum 40 %.

2 Install static discharge wipers immediately before sensitive points on the conveyor.

Components for static sensitive environments

Some FlexLink´s chains, slide rail, and guide rail cover can be ordered in carbon loaded or ISD versions. The carbon loaded material has high conductivity whereas the ISD material is dissipative.

Contact your FlexLink Systems representative for additional information.

Run-in period

Two to three weeks are usually enough as a run-in period. During this time, the conveyor should be cleaned a couple of times, to remove dust. After run-in, wear will be minimal, unless particles from the product or process reach the conveyor continuously.

Chain elongation

Especially during the run-in period, and if the load is heavy, the conveyor chain will slowly increase in length. This effect will be most obvious for long conveyors. After continuous operation for two weeks, it is often possible to remove a couple of chain links. After this period, we recommend a check every 3–6 months.

Ultra-violet light

The plastic material used in the conveyor chain will deteriorate slowly if exposed to strong ultra-violet radiation from industrial UV sources.

Introduction

The noise generated by the conveyor chain will decrease after a few days of operation. Generally, a higher speed will result in a higher noise level, though still less than the general noise in a factory environment. At high speeds, large-radius plain bends are quieter than wheel bends. The actual noise level depends on several factors: the product on the conveyor, the installation premises, surrounding equipment, and the conveyor layout and dimensions

Typical noise levels for a conveyor with an end drive unit are shown in the following tables. The noise level was measured at three points for each conveyor type, at a distance of 1 m from drive unit (**A**), bend (**B**), and idler end unit (**C**), at the same level as the top of the conveyor.

Conveyor with wheel bend

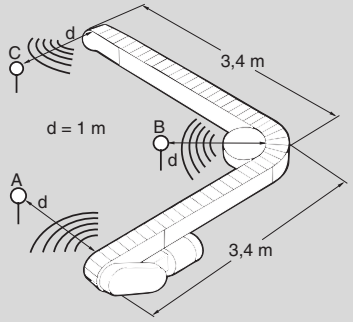

X85X conveyor

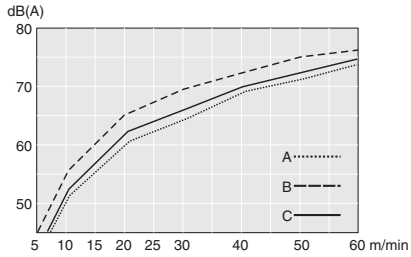

XBEB...HNLP, XBBH 90A85R160 and XBEJ A85

Conveyor with large radius plain bend

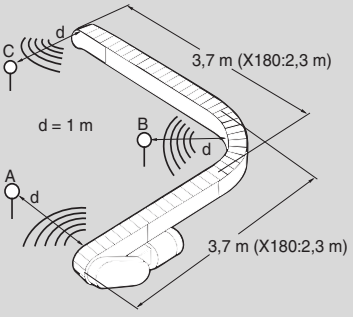

X85X conveyor (Speed 120m/min)

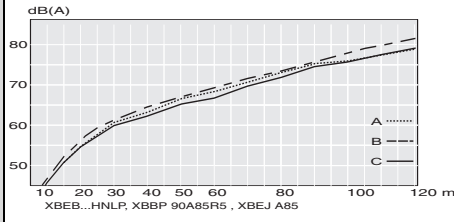

XBEB...HNLP, XBBP 90A85R5 , XBEJ A85

X180X/X300X conveyor

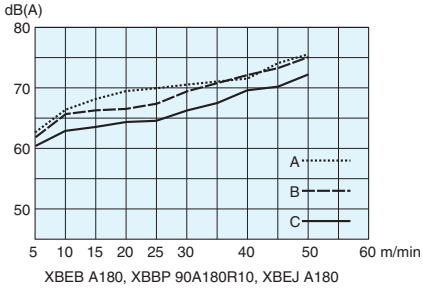

XBEB A180, XBBP 90A180R10, XBEJ A180

 © FlexLink 2021