Spare parts

End drive unit – XW

Contents

End drive unit (for 300 and 600 mm conveyors)
Complete unit – XWEB _B300 L/R, XWEB _B600 L/R ____ 2
0-unit – XWEB 0B300 L/R, XWEB 0B600 L/R ____ 3
Basic unit – XWEB 0B300 LU/RU, XWEB 0B600 LU/RU ____ 4
Basic module – XWEB _B300 L/R, XWEB _B600 L/R ____ 5

End drive unit (for 900 and 1200 mm conveyors)
Complete unit – XWEB _B900 L/R, XWEB _B1200 L/R ____ 6
0-unit – XWEB 0B900 L/R, XWEB 0B1200 L/R ____ 7
Basic unit – XWEB 0B900 LU/RU, XWEB 0B1200 LU/RU ____ 8
Basic module – XWEB _B900 L/R, XWEB _B1200 L/R ____ 9

Revision list ____ 10

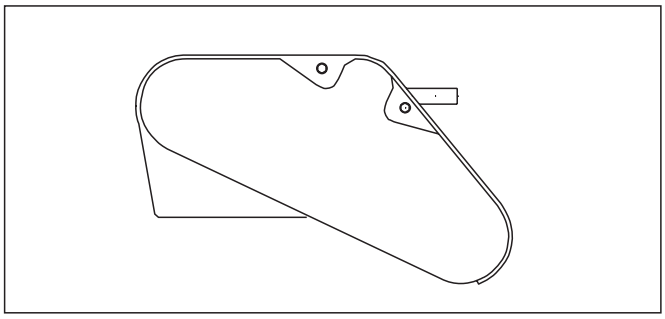

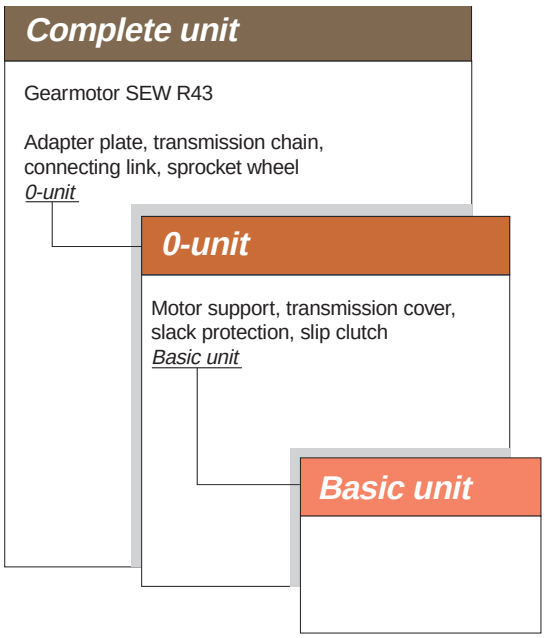

FlexLink®

End drive unit (for 300 and 600 mm conveyors)

Complete unit – XWEB _B300 L/R, XWEB _B600 L/R

For SEW R43 gearmotor

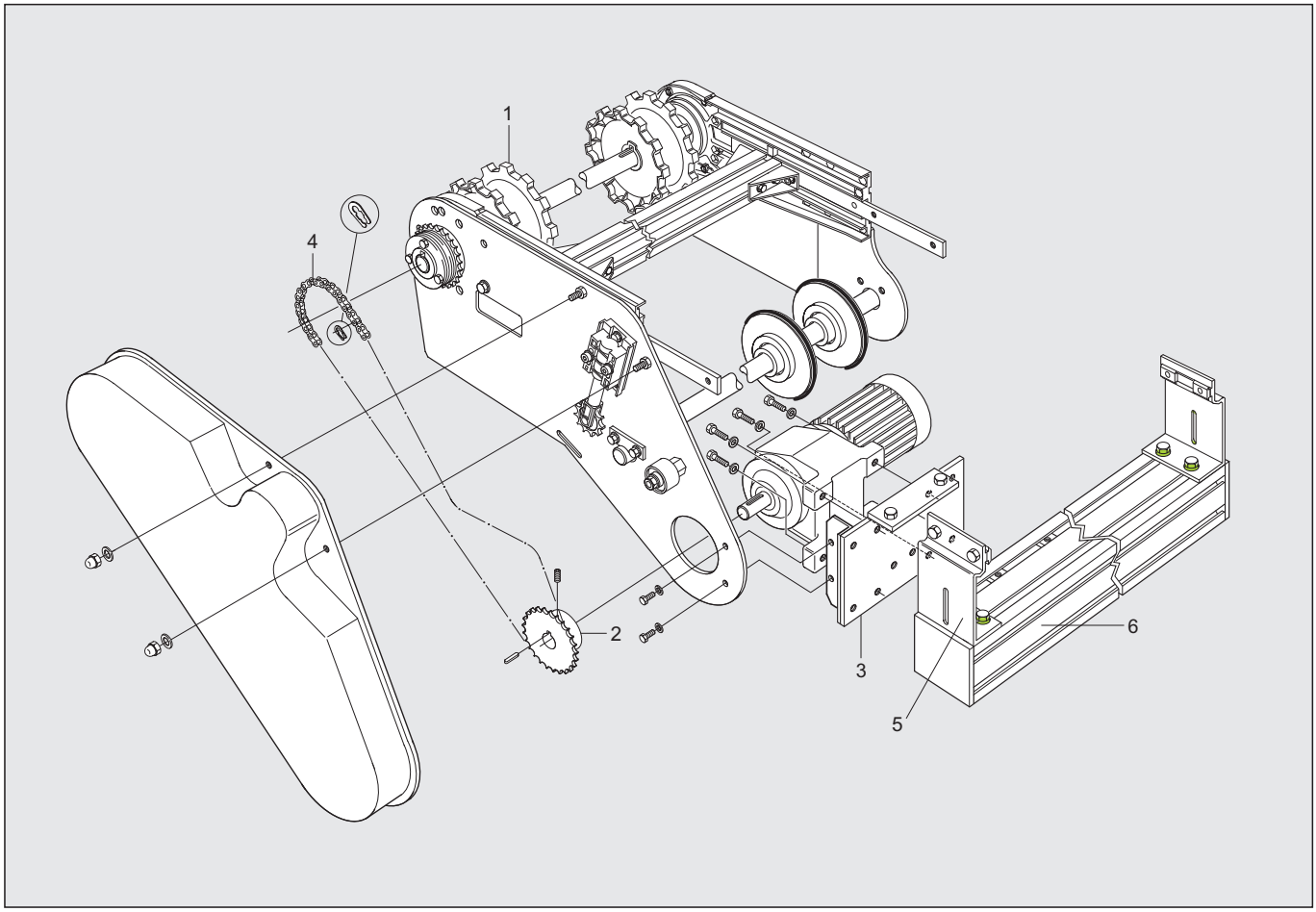

Item	Description	Part No	Qty	Comments
1	0-unit	XWEB 0 L	1	See next page for details
	0-unit	XWEB 0 R	1	See next page for details
2	Sprocket wheel 1/2" including set screw		1	See table below ☆
3	Adapter plate including bolts and washers	3920853	1	See SEW R43 gearmotor
4	Transmission chain 1/2" including connecting link	5111232	1	ISO/R 606-08B ☆
5	Beam support bracket	XLCT 21×125	2	
6	Support beam including screws (300 mm width)	3921905	1	
	Support beam including screws (600 mm width)	3921906	1	

☆ = recommended spare part

Sprocket wheel	Part No (SEW)
Z_1=17	3921989
Z_1=23	3921992
Z_1=25	3921993

End drive unit (for 300 and 600 mm conveyors)

0-unit – XWEB 0B300 L/R, XWEB 0B600 L/R

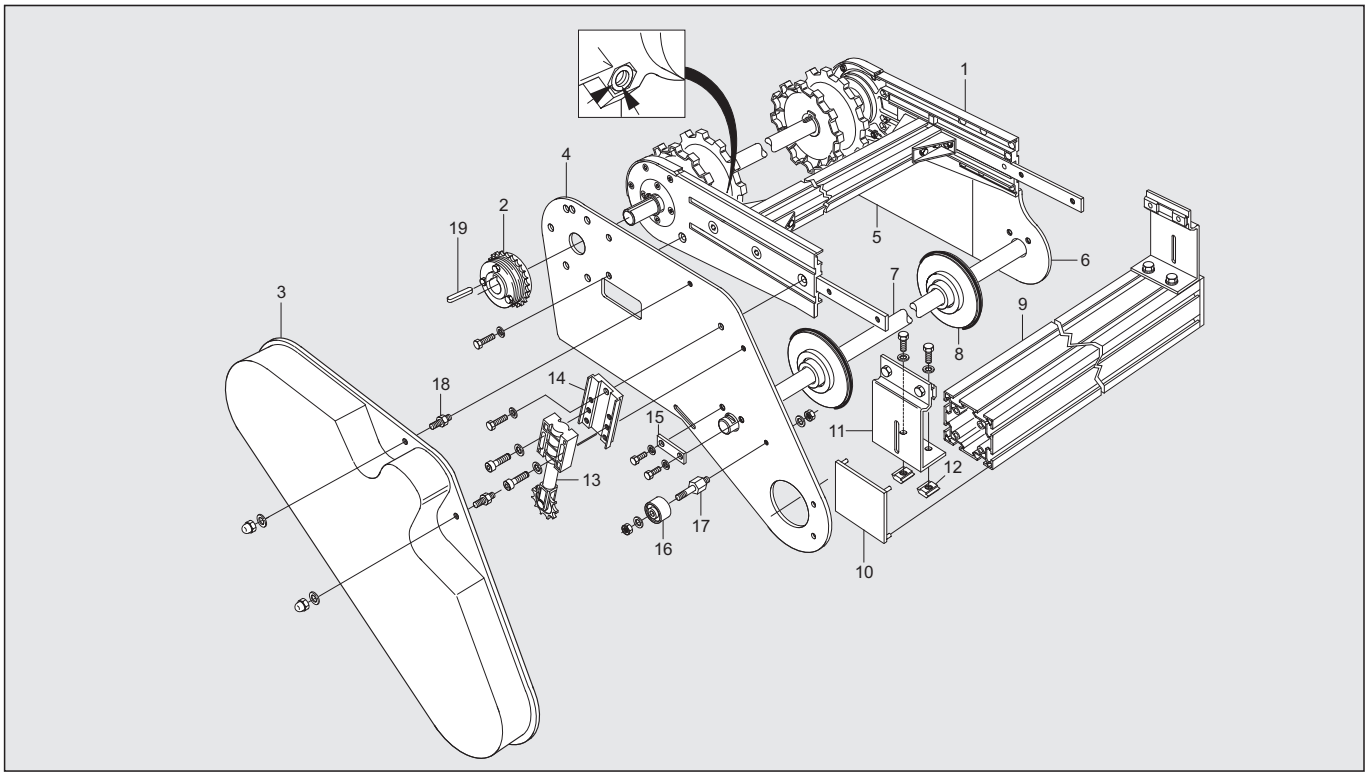

Item	Description	Part No	Qty	Comments
1	Basic unit	XWEB 0 LU	1	See next page for details
	Basic unit	XWEB 0 HU	1	See next page for details
2	Slip clutch ∅ 25 mm	5053981	1	☆
3	Transmission cover	3905888	1	☆
4	Motor bracket	3905711	1	
5	Slack protection	3905884	1	
6	Slack support	3905723	1	
7	Shaft (300 mm width)	3920804	1	
	Shaft (600 mm width)	3920805	1	
8	Slack wheel	3905958	2	
9	Support beam (300 mm width)	3921905	1	
	Support beam (600 mm width)	3921906	1	
10	End cap	XCBE 88	2	
11	Beam support bracket	XLCT 21×125	2	
12	Square nut	XCAN 8	4	
13	Tension pulley	3904541	1	
14	Distance plate	3904373	1	
15	Lock washer	3905877	1	
16	Wheel	XCAW 48	1	
17	Shaft	3905887	1	
18	Distance screw	3904855	1	
19	Wedge	8×7–40	1	ISO/R 773

☆ = recommended spare part

End drive unit (for 300 and 600 mm conveyors)

Basic unit – XWEB 0B300 LU/RU, XWEB 0B600 LU/RU

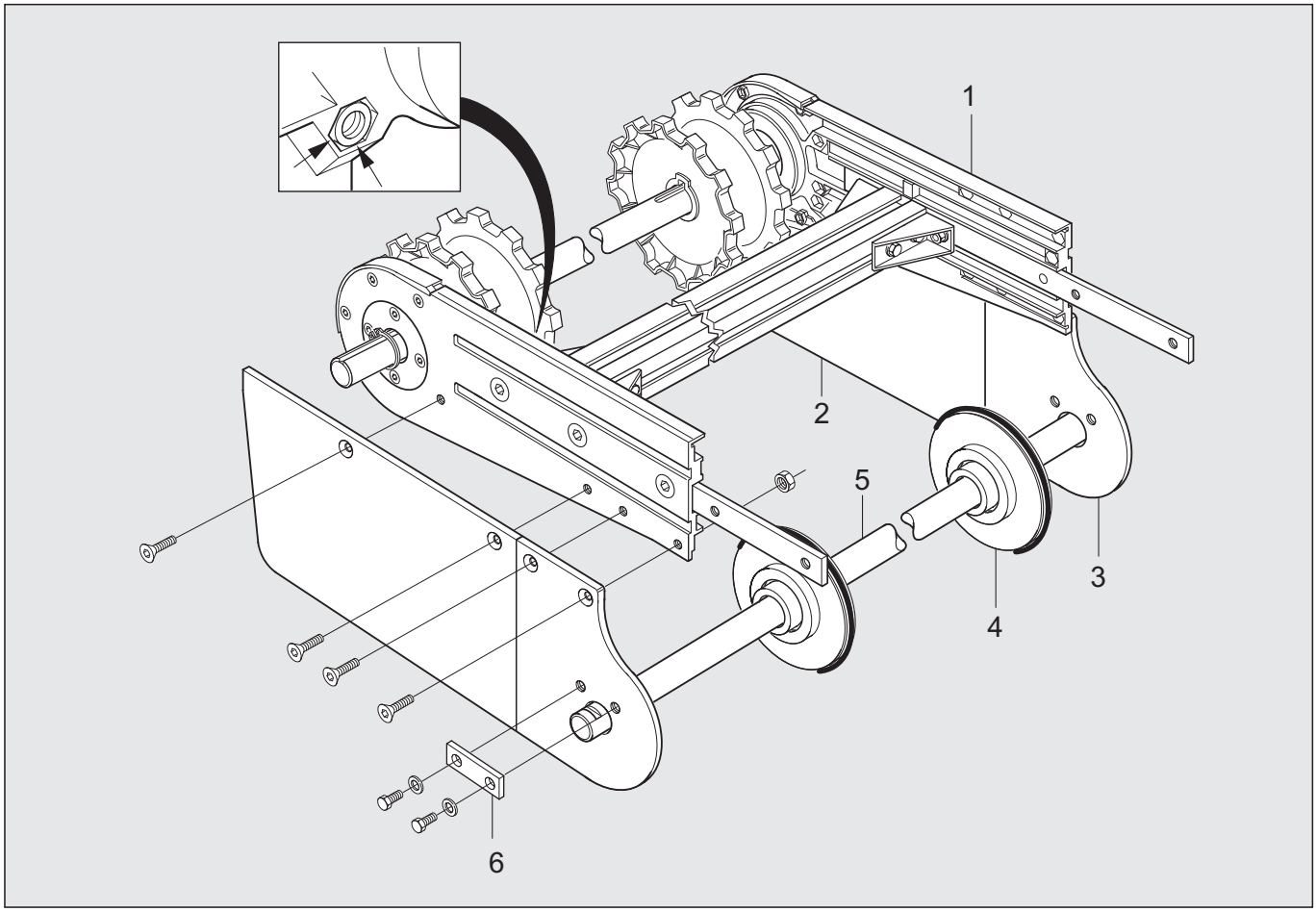

Item	Description	Part No	Qty	Comments
1	0-unit 300 mm (left-hand version)	3920797	1	See next page for details
	0-unit 300 mm (right-hand version)	3920798	1	See next page for details
	0-unit 600 mm (left-hand version)	3905856	1	See next page for details
	0-unit 600 mm (right-hand version)	3905677	1	See next page for details
2	Slack protection plate	3905884	2	
3	Wheel slack support	3905723	2	
4	Slack wheel	3905958	2	
5	Shaft (300 mm width)	3920804	1	
	Shaft (600 mm width)	3920805	1	
6	Lock washer	3905877	1	

End drive unit (for 300 and 600 mm conveyors)

Basic module – XWEB _B300 L/R, XWEB _B600 L/R

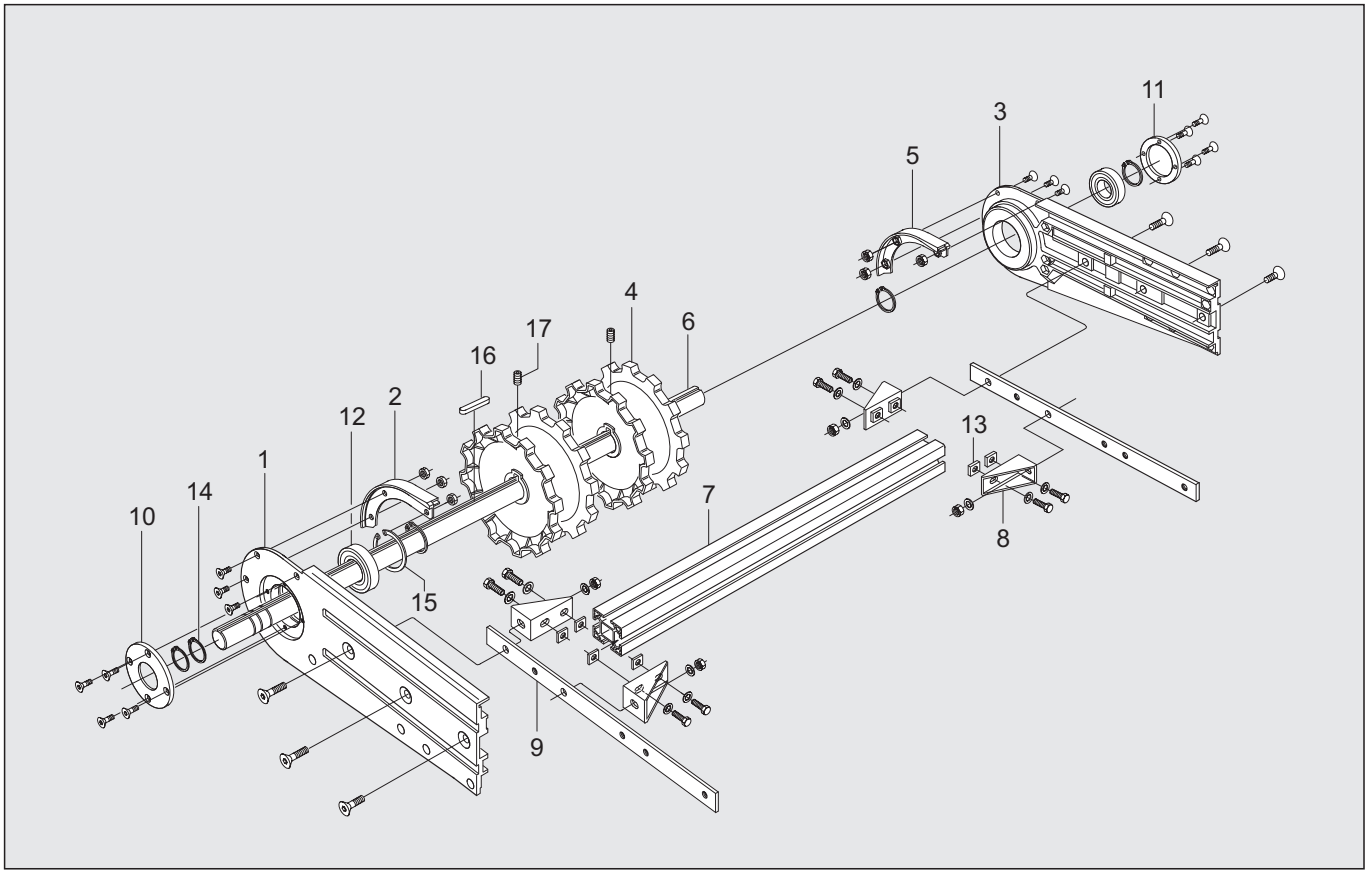

XWEB B300 L: Drawing No. 3920798, XWEB B300 R; Drawing No. 3920797
XWEB B600 L: Drawing No. 3905856, XWEB B600 R: Drawing No. 3905677

Item	Description	Part No	Qty	Comments
1	Side plate L	3905719	1	
2	Steering guide L	3905707	1	☆
3	Side plate R	3905718	1	
4	Drive wheel (300 mm width)	3905400	2	☆
	Drive wheel (600 mm width)	3905400	4	☆
5	Steering guide R	3905706	1	☆
6	Drive shaft (300 mm width)	3920814	1	
	Drive shaft (600 mm width)	3920815	1	
7	Beam (300 mm width)	3905898	1	
	Beam (600 mm width)	3920820	1	
8	Angle bracket	3905478	8	
9	Connecting strip	3905722	2	
10	Cover	3904772	1	
11	Cover	3904671	1	
12	Bearing	2205 E 2RS1/C3	2	TN9 VT 143
13	Slot nut	XLAQ 8	8	
14	Retaining ring	SgA 25	5	
15	Retaining ring	SgH 52	1	
16	Wedge (300 mm width)	8×7–40	2	
	Wedge (600 mm width)	8×7–40	4	
17	Set screw	SK6SS 6×10	1/wheel	

☆ = recommended spare part

End drive unit (for 900 and 1200 mm conveyors)

Complete unit – XWEB _B900 L/R, XWEB _B1200 L/R

For SEW R43 gearmotor

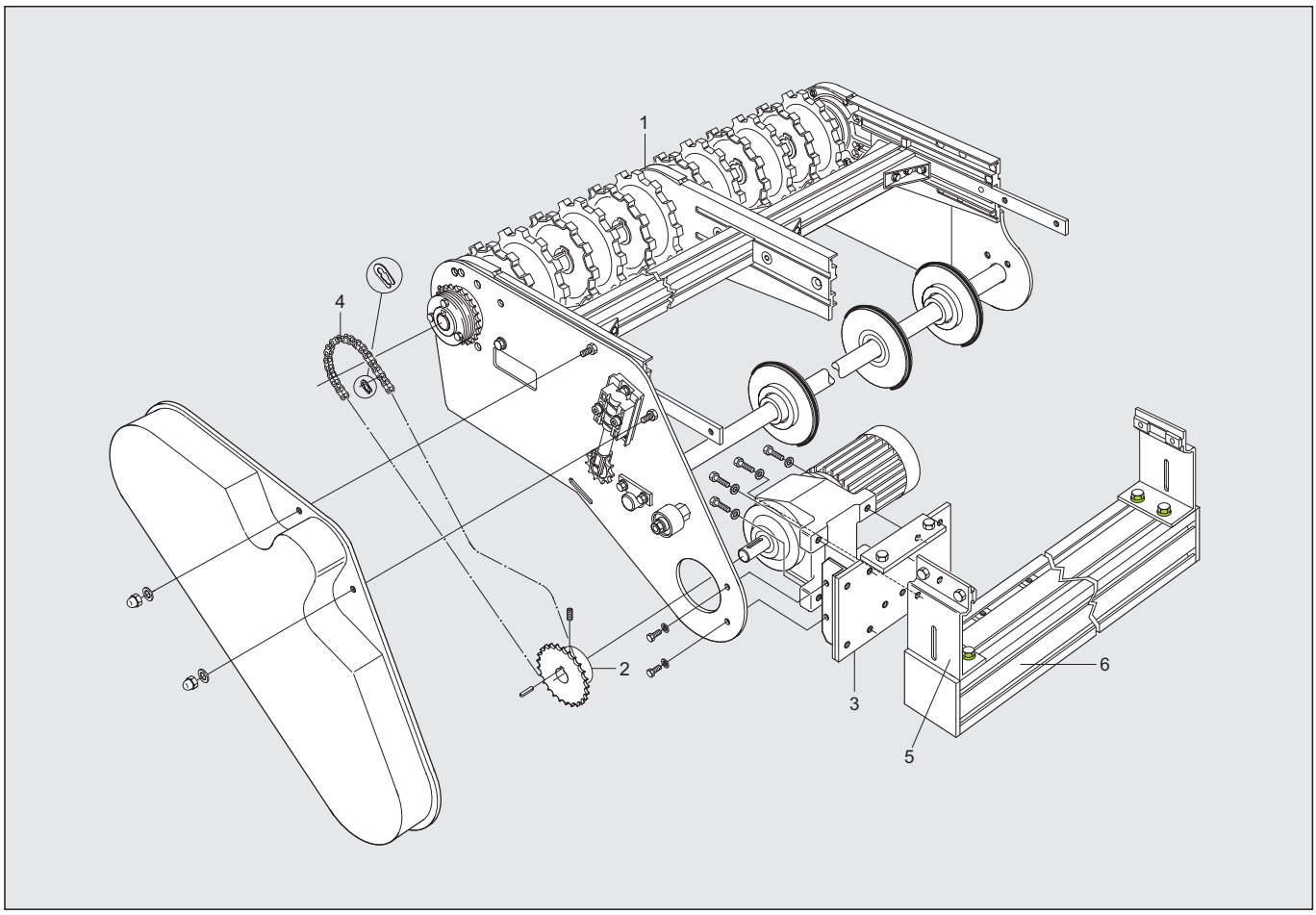

Item	Description	Part No	Qty	Comments
1	0-unit	XWEB 0 L	1	See next page for details
	0-unit	XWEB 0 R	1	See next page for details
2	Sprocket wheel 1/2" including set screw		1	See table below ☆
3	Adapter plate including bolts and washers	3920853	1	See SEW R43 gearmotor
4	Transmission chain 1/2" including connecting link	5111232	1	ISO/R 606-08B ☆
5	Beam support bracket	XLCT 21×125	2	
6	Support beam including screws (900 mm width)	3921907	1	
	Support beam including screws (1200 mm width)	3921908	1	

☆ = recommended spare part

Sprocket wheel	Part No (SEW)
Z_1=17	3921989
Z_1=23	3921992
Z_1=25	3921993

End drive unit (for 900 and 1200 mm conveyors)

0-unit – XWEB 0B900 L/R, XWEB 0B1200 L/R

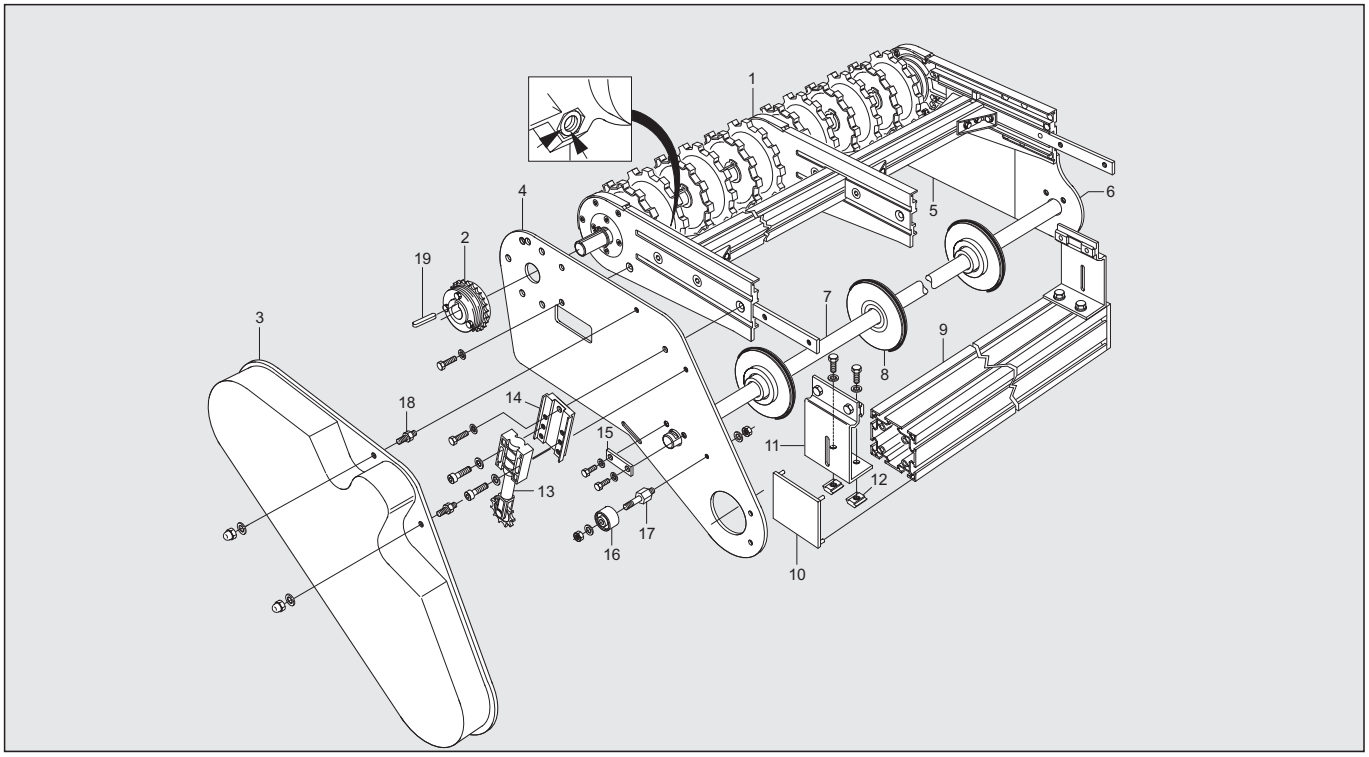

Item	Description	Part No	Qty	Comments
1	Basic unit (left-hand version)		1	See next page for details
	Basic unit (right-hand version)		1	See next page for details
2	Slip clutch ∅ 25 mm	5053981	1	☆
3	Transmission cover	3905888	1	☆
4	Motor bracket	3905711	1	
5	Slack protection plate	3905884	1	
6	Wheel slack support	3905723	1	
7	Shaft (900 mm width)	3905876	1	
	Shaft (1200 mm width)	3920806	1	
8	Slack wheel	3905958	3	
9	Beam (900 mm width)	3921907	1	
	Beam (1200 mm width)	3921908	1	
10	End cap	XCBE 88	2	
11	Beam support bracket	XLCT 21×125	2	
12	Nut	XCAN 8	8	
13	Tension pulley	3904541	1	
14	Distance plate	3904373	1	
15	Lock washer	3905877	1	
16	Wheel	XCAW 48	1	
17	Shaft	3905887	1	
18	Distance screw	3904855	2	
19	Wedge	8×7–40	1	

☆ = recommended spare part

End drive unit (for 900 and 1200 mm conveyors)

Basic unit – XWEB 0B900 LU/RU, XWEB 0B1200 LU/RU

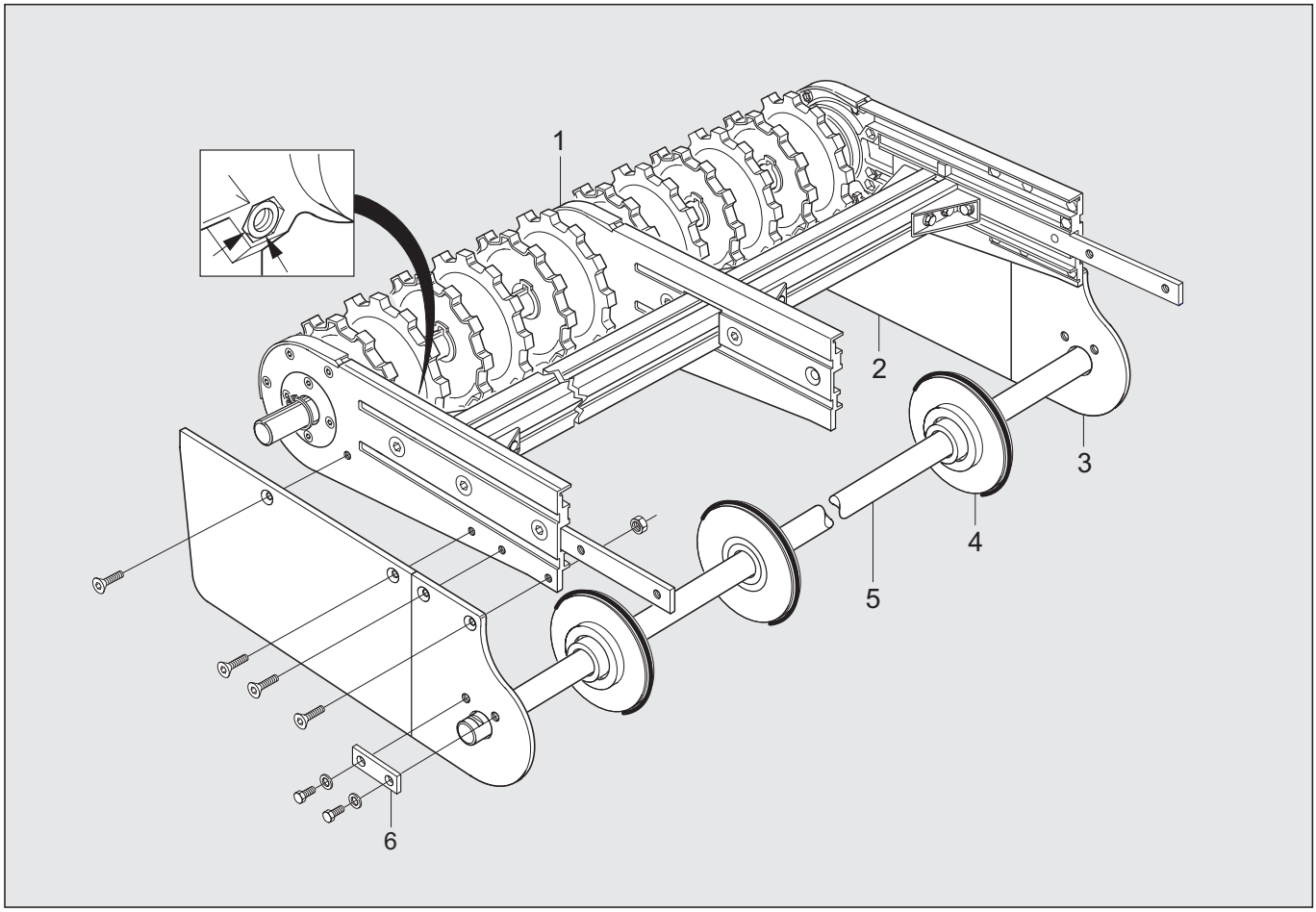

Item	Description	Part No	Qty	Comments
1	0-unit (900 mm width (left-hand version)	3920781	1	See next page for details
	0-unit (900 mm width (right-hand version)	3920799	1	See next page for details
	0-unit (1200 mm width (left-hand version)	3920783	1	See next page for details
	0-unit (1200 mm width (right-hand version)	3920782	1	See next page for details
2	Slack protection	3905884	2	
3	Wheel slack support	3905723	2	
4	Slack wheel	3905958	3	
5	Shaft (900 mm width)	3905876	1	
	Shaft (1200 mm width)	3920806	1	
6	Lock washer	3905877	1	

End drive unit (for 900 and 1200 mm conveyors)

Basic module – XWEB _B900 L/R, XWEB _B1200 L/R

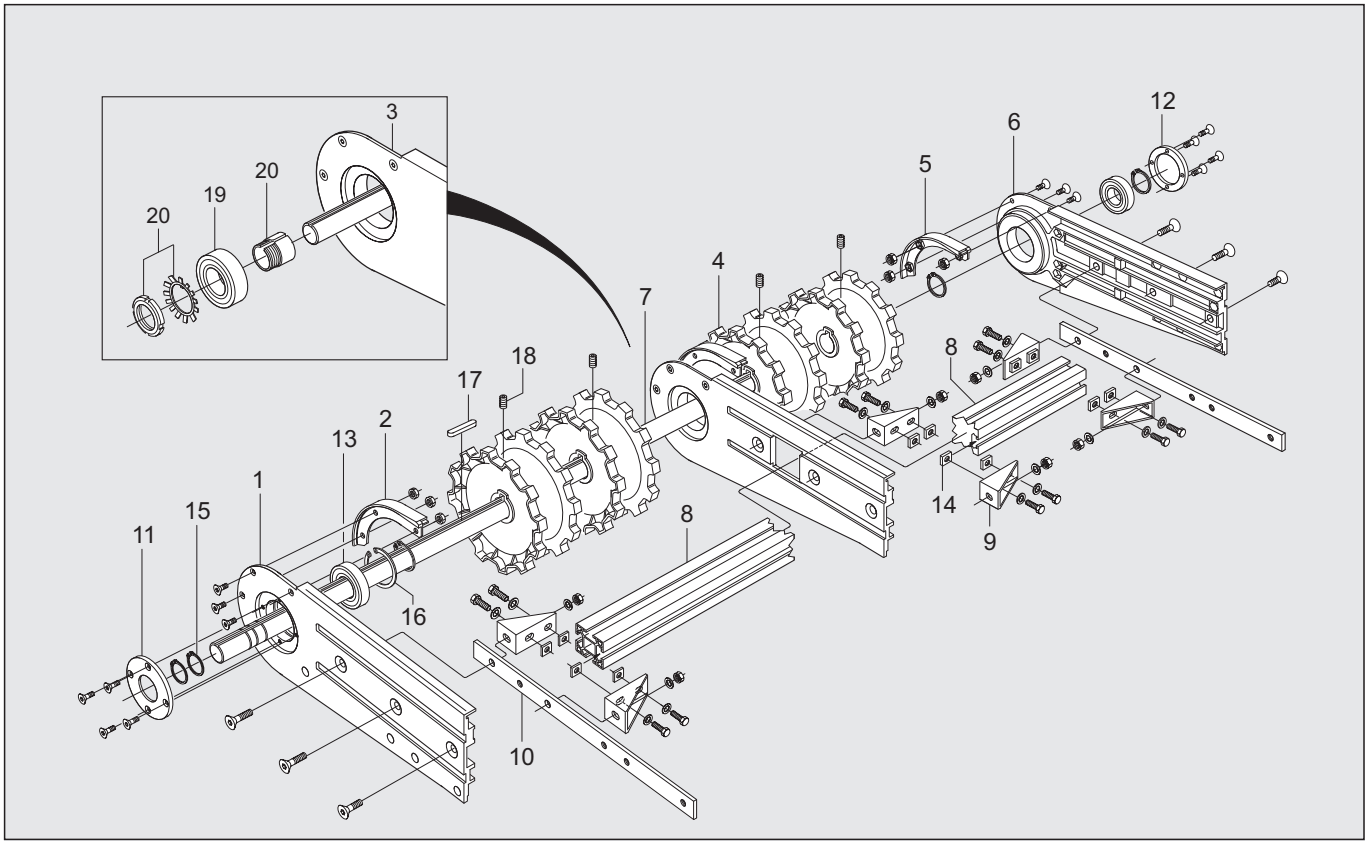

XWEB B900 L: Drawing No. 3920781, XWEB B900 R: Drawing No. 3920799
XWEB B1200 L: Drawing No. 3920783, XWEB B1200 R: Drawing No. 3920782

Item	Description	Part no.	Qty	Comments
1	Side plate	3905719	1	
2	Steering	3905707	1	☆
3	Side plate	3905891	1	
4	Wheel (900 mm width)	3905400	6	☆
	Wheel (1200 mm width)	3905400	8	☆
5	Steering	3905706	2	☆
6	Side plate	3905718	1	
7	Drive shaft (900 mm width)	3905859	1	
	Drive shaft (1200 mm width)	3920816	1	
8	Beam (900 mm width)	3921907	1	
	Beam (1200 mm width)	3921908	1	
9	Angle bracket	3905478	6	
10	Connecting strip	3905722	2	
11	Cover	3904772	1	
12	Cover	3904671	1	
13	Bearing	2205 E 2RS1/C3	2	TN9 VT 143
14	Slot nut	XLAQ 8	12	
15	Retaining ring	SgA 25	5	
16	Retaining ring	SgH 52	1	
17	Wedge	8×7–40		
18	Set screw	SK6SS 6×10	1/wheel	
19	Bearing	2206 EK/2RS1/C3	1	
20	Clamping sleeve	H 306	1	

☆ = recommended spare part

Revision list

Document designation	Date	Type of revision	Entered by
XW001-E1	98-10-14	New version	Enator Inforum
XW001-E2	07-11-08	New item number for transission chain	BS
XW001-E3	09-11-06	Page 5 and 9 switched partnumber	JE